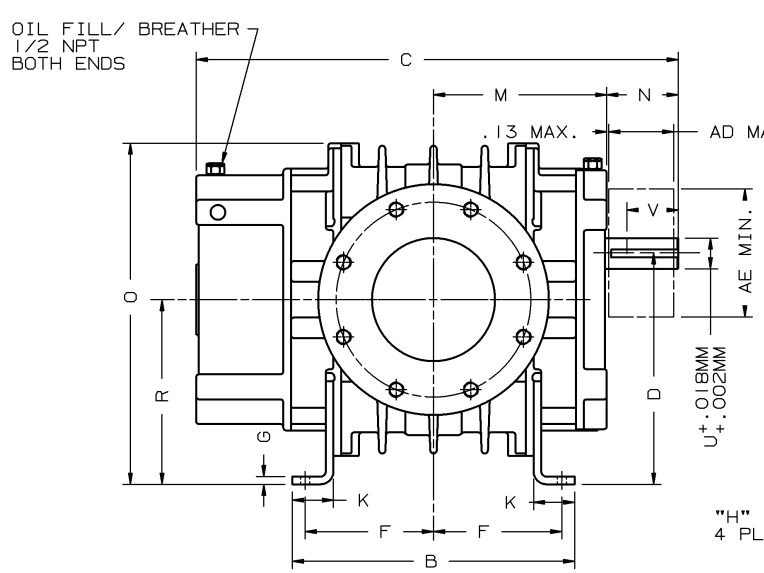


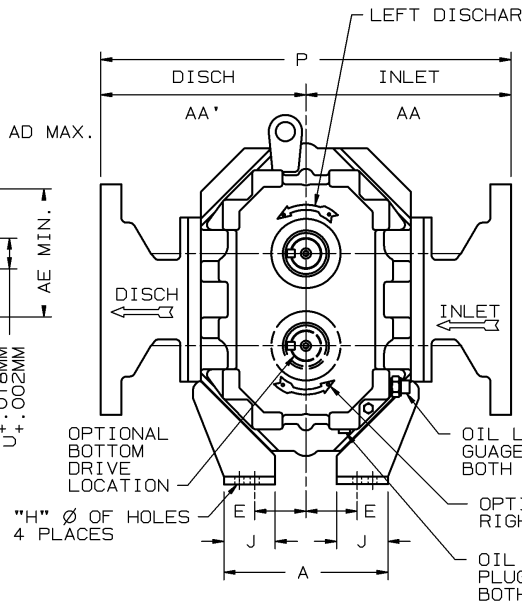


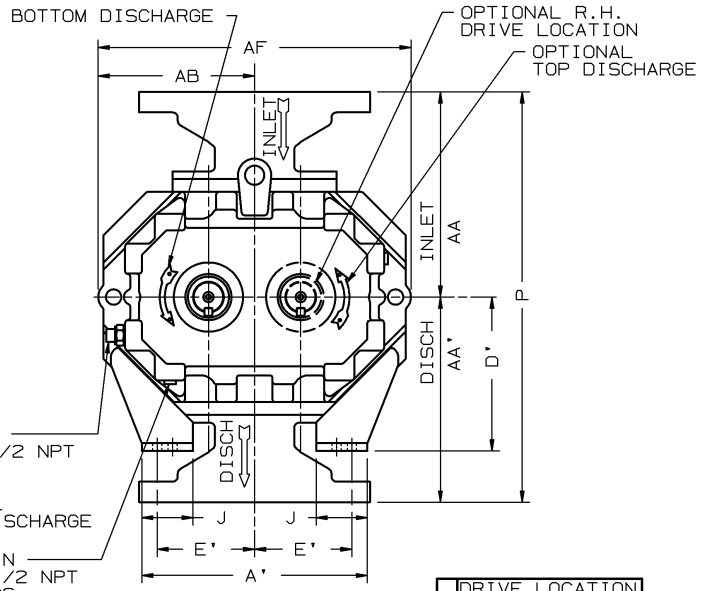


INLET & DISCHARGE FLANGES TO MATE FLUSH & SQUARE WITH FLAT FACE FLANGE ONLY. USE FULL FACE GASKETS.

V-BELT DRIVEN UNITS: MOTOR TO BE LOCATED ON INLET SIDE OF BLOWER.

AD - MAXIMUM SHEAVE WIDTH (SEE OVERHUNG LOAD LIMIT K-24102)

AE - MINIMUM SHEAVE DIAMETER (SEE OVERHUNG LOAD LIMIT K-24102)

ALL DIMENSIONS IN INCHES UNLESS OTHERWISE SPECIFIED
METRIC DIMENSIONAL #90780021

| ANSI FLANGE DIMENSIONS | | | | | | |
|---|---|---|---|---|---|---|
| | FA | FB | FC | FD | FE | FG |
| 6 FLG | 6.00 | 9.50 | 11.25 | 8 | .75-10 | 1.00 |
| 8 FLG | 8.00 | 11.75 | 13.50 | 8 | .75-10 | 1.13 |
| 10 FLG | 10.00 | 14.25 | 16.00 | 12 | .88-9 | 1.19 |

FA - FLANGE OPENING
FB - FLANGE BOLT CIRCLE
FC - FLANGE O.D.
FD - No. TAPPED HOLES
FE - SIZE OF TAPPED HOLES
FG - DEPTH OF TAP

| DISCH. LOCATION | DRIVE LOCATION LH | DRIVE LOCATION RH |
|---|---|---|
| TOP | CW | CCW |
| BOTTOM | CCW | CW |

UNIT IS BUILT TO CUSTOMERS SPECIFIED ORIENTATION

| MODEL | A | A' | B | C | D | D' | E | E' | F | G | H | J | K | M | N | O | P | R | U MM | V MM | KEYWAY MM | INLET AA | DISCH AA' | AB | AD | AE | AF | FLANGE SIZE | APPROX WEIGHT |
|---|---|---|---|---|---|---|---|---|---|---|---|---|---|---|---|---|---|---|---|---|---|---|---|---|---|---|---|---|---|
| 155 | 8.00 | 11.00 | 13.77 | 23.50 | 11.25 | 7.50 | 2.50 | 4.75 | 6.26 | .38 | .44 | 2.50 | 2.00 | 8.44 | 3.50 | 16.63 | 20.00 | 9.00 | 35.0 | 63.5 | 10.0X5.0 | 10.00 | 10.00 | 7.63 | 3.06 | 7.10 | 15.25 | 6" | 356 LBS |
| 225 | " | " | 17.78 | 27.50 | " | " | " | " | 8.26 | " | " | " | " | 10.44 | " | " | 21.25 | " | " | " | " | 10.63 | 10.63 | " | " | " | " | " | 428 LBS |
| 280 | " | " | 21.03 | 30.75 | " | " | " | " | 9.88 | " | " | " | " | 12.06 | " | " | 21.50 | " | " | " | " | 10.75 | 10.75 | " | " | " | " | 8" | 520 LBS |
| | | | | | | | | | | | | | | | | | | | | | | | | | | | | | |
| 400 | 9.00 | 15.00 | 22.11 | 33.56 | 15.00 | 9.00 | 3.50 | 6.50 | 10.43 | .38 | .56 | 2.50 | 2.00 | 13.08 | 4.33 | 22.00 | 24.75 | 12.00 | 50.0 | 76.2 | 14.0X5.5 | 12.38 | 12.38 | 10.00 | 4.44 | 8.50 | 20.00 | 8" | 836 LBS |
| 500 | " | " | 27.73 | 37.73 | " | " | " | " | 12.52 | " | " | " | " | 15.17 | " | " | 25.88 | " | " | " | " | 12.94 | 12.94 | " | " | " | " | 10" | 996 LBS |
| | | | | | | | | | | | | | | | | | | | | | | | | | | | | | |
| | | | | | | | | | | | | | | | | | | | | | | | | | | | | | |

CERTIFIED CORRECT FOR
CUSTOMER ORDER No.
ROOTS ORDER No.
DATE

| REVISIONS | BY | CHANGE NOTICE | CHKD. | APP. |
|---|---|---|---|---|
| | | | | |

V-BELT DRIVE DATA
BELTS
DRIVE SHEAVE
DRIVEN SHEAVE
CENTER DISTANCE

RAM X™
TRILOBE BLOWERS
MODELS 155 THRU 500

DRESSER Roots

Dresser ROOTS, Dresser, Inc.
Connersville, IN USA

| RDR | | | 90779021 | REV. |
|---|---|---|---|---|
| DR | CHKD | APP | | |

PRINTED IN U.S.A.

90779A21 XXAD