Stoddard Silencers, Inc. 1017 Progress Dr. Grayslake, Illinois 60030 Phone (847) 223-8636	name F64-1-1/2 Intake Filter Silencer	A	no. 46042
		date 8/23/91	by CRC
			appd.

no.	revision	date	by
3	Changed Finish	11/14/11	DSP
2	Redrawn to CAD	5/3/99	DJB
1	Redrawn with new head	8/23/91	CRC

A

no. 46042

rev. R3

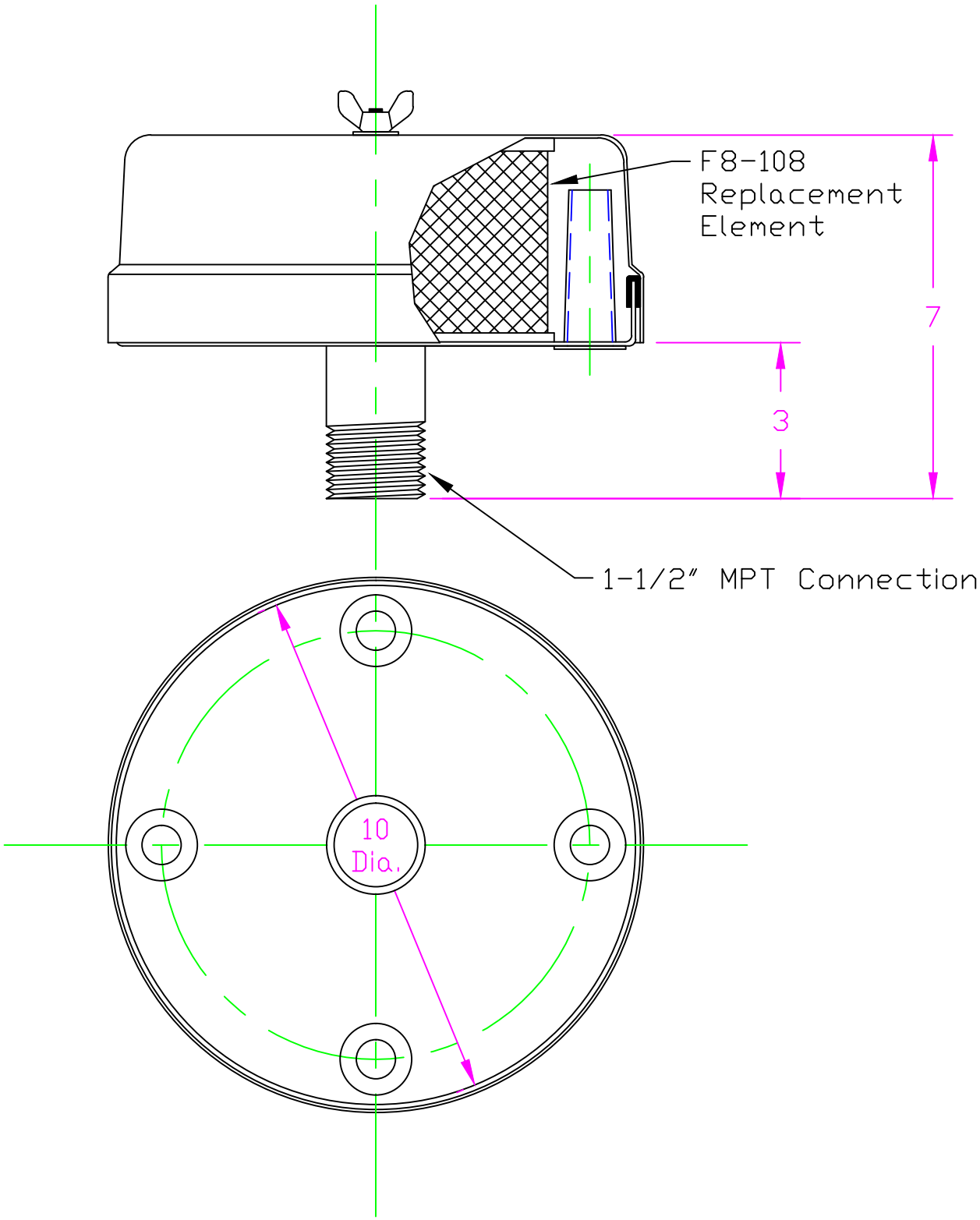

EXTERNAL DIMENSIONS CERTIFIED FOR:		F64-1-1/2, Scale:1=4
CUST.	S.S. NO.	approx. wt. 7 lbs.
P.O. No.	BY	material Carbon Steel
		finish Blue Powder Coat