Stoddard Silencers, Inc. 1017 Progress Dr. Grayslake, Illinois 60030 Phone (847) 223-8636	name F65-14 Inline Air Filter	A	no. 45061
		date 4/9/85	by CRC
			appd.

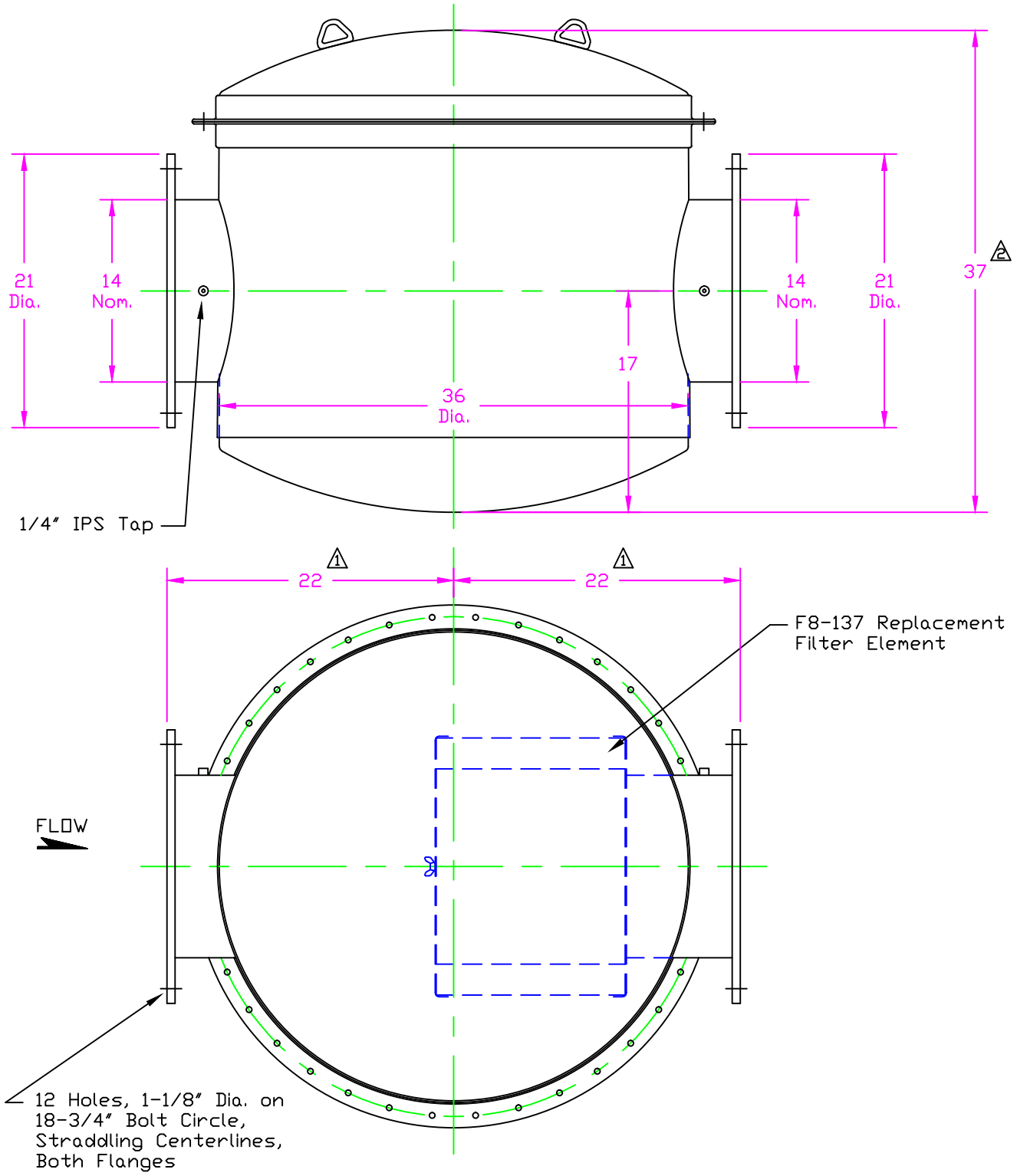

no.	revision	date	by
2	Height was 36-1/4"	10/12/99	JJC
1	"E" dimension was 21"	9/17/85	CRC

A

no. 45061

rev. -2

EXTERNAL DIMENSIONS CERTIFIED FOR:		F65-14, Scale:1=10
CUST.	S.S. NO.	approx. wt. 435 lbs.
P.O. No.	BY	material Carbon Steel
		finish Shop Coat Primer