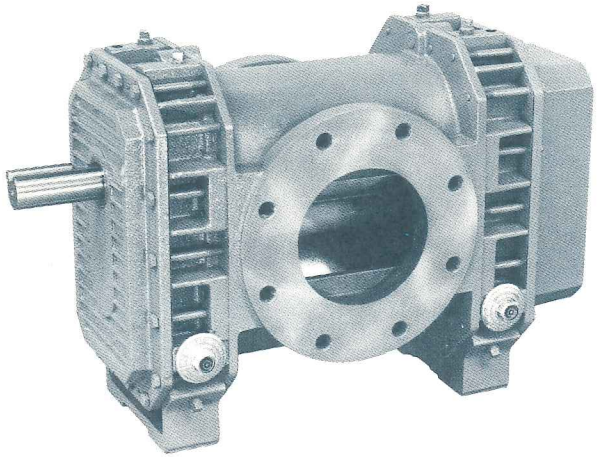

# SPECIFICATIONS

# Roots RCS Rotary Positive Blowers

## FRAMES 404 THRU 624

## OPERATING PRINCIPLE

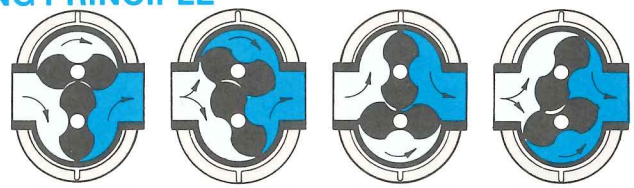


**Two figure eight lobe impellers mounted on parallel shafts rotate in opposite directions. As each impeller passes the blower inlet, it traps a definite volume of air and carries it around the case to the blower outlet, where the air is discharged. With constant speed operation, the displaced volume is essentially the same regardless of pressure, temperature or barometric pressure.**

**Timing gears control the relative position of the impellers to each other and maintain small but definite clearances. This allows operation without lubrication being required inside air casing.**

## OUTLINE DRAWING & DIMENSIONAL TABLE

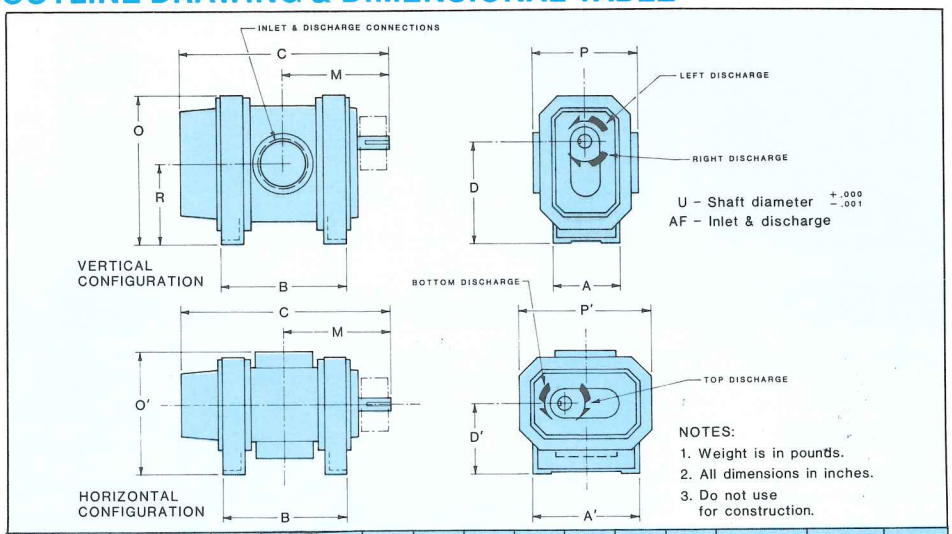


| FRAME SIZE | A | A' | B | C | D | D' | M | O | O' | P | P' | R | U | KEYWAY | AF | APPROX. WEIGHT |
|---|---|---|---|---|---|---|---|---|---|---|---|---|---|---|---|---|
| 404 | 7.50 | 12.00 | 8.88 | 18.38 | 11.25 | 7.50 | 5.75 | 16.50 | 13.50 | 12.00 | 15.00 | 9.00 | 1.500 | .375 x .188 | 3" NPT | 230 |
| 406 | 7.50 | 12.00 | 10.88 | 20.38 | 11.25 | 7.50 | 6.75 | 16.50 | 13.50 | 12.00 | 15.00 | 9.00 | 1.500 | .375 x .188 | 4" NPT | 260 |
| 409 | 7.50 | 12.00 | 13.88 | 23.38 | 11.25 | 7.50 | 8.25 | 16.50 | 13.00 | 11.00 | 15.00 | 9.00 | 1.500 | .375 x .188 | 4" NPT | 300 |
| 412 | 7.50 | 12.00 | 16.88 | 26.38 | 11.25 | 7.50 | 9.75 | 16.50 | 13.00 | 11.00 | 15.00 | 9.00 | 1.500 | .375 x .188 | 6" FLG | 360 |
| 418 | 7.50 | 12.00 | 22.88 | 32.38 | 11.25 | 7.50 | 12.75 | 16.50 | 13.00 | 11.00 | 15.00 | 9.00 | 1.500 | .375 x .188 | 8" FLG | 440 |
| 616 | 10.00 | 16.00 | 21.44 | 32.44 | 15.00 | 9.00 | 12.19 | 22.00 | 16.25 | 14.50 | 20.00 | 12.00 | 2.000 | .500 x .250 | 8" FLG | 650 |
| 624 | 10.00 | 16.00 | 29.44 | 40.44 | 15.00 | 9.00 | 16.19 | 22.00 | 16.25 | 14.50 | 20.00 | 12.00 | 2.000 | .500 x .250 | 10" FLG | 775 |

## BASIC BLOWER DESCRIPTION

The basic model RCS is designed with integral-shaft, ductile iron impellers having an involute profile. The alloy steel timing gears are taper mounted on the shafts and cylindrical roller bearings are used. Both ends of the unit are splash oil lubricated. The casing, headplates, gear cover and end cover are grey iron. Piston rings reduce the air leakage through the shaft openings in the headplates and lip type oil seals prevent lubricants from entering the air chamber. The top shaft is extended for drive on vertical units and either shaft can be extended for drive on horizontal units. These units are center-timed to allow rotation in either direction. After standard tests, the unit is painted and corrosion protection added. Copies of instruction manuals are provided.

Available accessories include: baseplate for the blower and driver, v-belt drive with guard, coupling drive with guard, snubbers, driver, relief valves, inlet filter and silencers.

**EVERY GROWING PLANT NEEDS ROOTS**

## PERFORMANCE TABLE—PRESSURE

| FRAME SIZE | SPEED RPM | 4 PSI CFM | 4 PSI BHP | 6 PSI CFM | 6 PSI BHP | 8 PSI CFM | 8 PSI BHP | 10 PSI CFM | 10 PSI BHP | 12 PSI CFM | 12 PSI BHP | 15 PSI CFM | 15 PSI BHP |
|---|---|---|---|---|---|---|---|---|---|---|---|---|---|
| 404 | 1750 | 140 | 3.6 | 127 | 5.3 | 117 | 7.0 | 108 | 8.7 | 99 | 10.4 | | |
| | 2322 | 204 | 5.1 | 187 | 7.3 | 182 | 9.6 | 173 | 11.7 | 164 | 13.9 | 154 | 17.2 |
| | 3071 | 288 | 7.3 | 275 | 10.3 | 266 | 13.1 | 256 | 16.0 | 248 | 18.9 | 233 | 23.3 |
| | 3820 | 369 | 9.8 | 356 | 13.4 | 346 | 16.9 | 336 | 20.5 | 328 | 24.1 | 317 | 29.4 |
| 406 | 1750 | 210 | 5.4 | 192 | 8.0 | 176 | 10.5 | 162 | 13.0 | 149 | 15.6 | | |
| | 2322 | 307 | 7.5 | 289 | 10.8 | 274 | 14.2 | 260 | 17.5 | 248 | 20.9 | 231 | 25.8 |
| | 3071 | 433 | 10.7 | 414 | 15.1 | 399 | 19.5 | 386 | 23.8 | 374 | 28.2 | 358 | 34.7 |
| | 3820 | 554 | 14.3 | 536 | 19.6 | 520 | 25.0 | 506 | 30.4 | 493 | 36.7 | 476 | 43.8 |
| 409 | 1750 | 315 | 8.5 | 282 | 12.0 | 260 | 15.8 | 238 | 20.0 | 220 | 23.5 | | |
| | 2322 | 456 | 11.4 | 427 | 16.4 | 404 | 21.4 | 383 | 26.4 | 364 | 31.5 | | |
| | 3071 | 643 | 15.9 | 615 | 22.4 | 591 | 29.0 | 570 | 35.5 | 551 | 42.0 | 526 | 51.6 |
| | 3820 | 830 | 20.6 | 802 | 28.7 | 778 | 36.7 | 757 | 44.7 | 738 | 52.7 | 713 | 64.6 |
| 412 | 1750 | 415 | 11.0 | 375 | 16.0 | 340 | 21.0 | 320 | 26.0 | 285 | 32.0 | | |
| | 2322 | 607 | 15.0 | 569 | 21.7 | 538 | 28.3 | 510 | 35.0 | 485 | 41.6 | | |
| | 3071 | 856 | 20.8 | 819 | 29.6 | 787 | 38.3 | 759 | 47.0 | 734 | 55.7 | 700 | 68.8 |
| | 3820 | 1106 | 27.2 | 1068 | 37.9 | 1037 | 48.4 | 1009 | 59.3 | 984 | 70.0 | 950 | 86.0 |
| 418 | 1750 | 618 | 16.5 | 560 | 24.0 | 511 | 31.7 | 469 | 39.0 | | | | |
| | 2322 | 911 | 22.3 | 855 | 32.4 | 807 | 42.4 | 766 | 52.4 | | | | |
| | 3071 | 1286 | 30.9 | 1229 | 43.9 | 1182 | 57.0 | 1140 | 70.1 | | | | |
| | 3820 | 1660 | 40.3 | 1604 | 56.3 | 1556 | 72.4 | 1515 | 88.4 | | | | |
| 616 | 1269 | 749 | 18.5 | 692 | 27.2 | 644 | 35.9 | 602 | 44.6 | 564 | 53.0 | | |
| | 1750 | 1128 | 26.1 | 1072 | 38.0 | 1024 | 49.9 | 982 | 61.8 | 943 | 73.7 | | |
| | 2124 | 1423 | 32.5 | 1367 | 46.8 | 1319 | 61.2 | 1277 | 75.5 | 1239 | 89.9 | 1187 | 111.4 |
| | 2862 | 2006 | 46.2 | 1949 | 65.2 | 1901 | 84.2 | 1859 | 103.2 | 1821 | 122.1 | 1769 | 150.6 |
| 624 | 1269 | 1124 | 28.8 | 1038 | 41.9 | 967 | 55.0 | 903 | 68.1 | | | | |
| | 1750 | 1693 | 40.4 | 1608 | 58.5 | 1536 | 76.5 | 1473 | 94.6 | | | | |
| | 2124 | 2136 | 50.8 | 2051 | 72.8 | 1979 | 94.7 | 1916 | 116.6 | | | | |
| | 2862 | 3010 | 75.0 | 2925 | 104.6 | 2853 | 134.1 | 2790 | 163.7 | | | | |

## PERFORMANCE TABLE—VACUUM

| FRAME SIZE | SPEED RPM | 4″ Hg VACUUM CFM | 4″ Hg VACUUM BHP | 6″ Hg VACUUM CFM | 6″ Hg VACUUM BHP | 9″ Hg VACUUM CFM | 9″ Hg VACUUM BHP | 12″ Hg VACUUM CFM | 12″ Hg VACUUM BHP | 15″ Hg VACUUM CFM | 15″ Hg VACUUM BHP |
|---|---|---|---|---|---|---|---|---|---|---|---|
| 404 | 1750 | 154 | 1.9 | 142 | 2.7 | 125 | 3.9 | 108 | 5.1 | | |
| | 2322 | 218 | 2.7 | 206 | 3.8 | 188 | 5.8 | 174 | 7.0 | 155 | 8.5 |
| | 3071 | 300 | 4.2 | 290 | 5.6 | 271 | 8.3 | 257 | 9.7 | 239 | 11.7 |
| | 3820 | 382 | 6.0 | 371 | 7.6 | 355 | 10.1 | 337 | 12.5 | 318 | 15.0 |
| 406 | 1750 | 231 | 2.8 | 214 | 4.0 | 187 | 5.8 | 163 | 7.7 | | |
| | 2322 | 327 | 4.1 | 310 | 5.6 | 283 | 8.4 | 261 | 10.3 | | |
| | 3071 | 453 | 5.6 | 435 | 8.1 | 408 | 11.7 | 388 | 14.2 | 359 | 17.3 |
| | 3820 | 575 | 8.5 | 558 | 11.0 | 533 | 14.6 | 507 | 18.3 | 478 | 22.0 |
| 409 | 1750 | 340 | 4.3 | 320 | 6.1 | 280 | 9.0 | 245 | 11.4 | | |
| | 2322 | 486 | 6.2 | 461 | 8.6 | 423 | 12.1 | 385 | 15.7 | | |
| | 3071 | 674 | 9.0 | 648 | 12.0 | 611 | 16.6 | 572 | 21.3 | 528 | 25.9 |
| | 3820 | 861 | 12.0 | 835 | 15.7 | 798 | 21.1 | 759 | 26.8 | 715 | 32.4 |
| 412 | 1750 | 460 | 6.0 | 430 | 9.0 | 375 | 12.0 | 330 | 16.0 | | |
| | 2322 | 648 | 8.1 | 613 | 11.2 | 564 | 16.0 | 512 | 20.8 | | |
| | 3071 | 897 | 11.6 | 863 | 15.7 | 813 | 21.9 | 762 | 28.0 | 703 | 34.2 |
| | 3820 | 1147 | 15.7 | 1112 | 20.6 | 1063 | 28.1 | 1011 | 35.5 | 952 | 42.9 |
| 418 | 1750 | 682 | 8.6 | 628 | 12.2 | 552 | 17.8 | 472 | 23.2 | | |
| | 2322 | 973 | 11.8 | 921 | 16.6 | 847 | 23.8 | 769 | 30.9 | 681 | 38.1 |
| | 3071 | 1347 | 17.0 | 1296 | 23.2 | 1221 | 32.4 | 1144 | 41.6 | 1056 | 50.9 |
| | 3820 | 1722 | 23.0 | 1670 | 30.4 | 1596 | 41.6 | 1518 | 52.7 | 1430 | 63.8 |
| 616 | 1269 | 811 | 9.7 | 759 | 14.0 | 684 | 20.4 | 605 | 26.8 | | |
| | 1750 | 1191 | 13.7 | 1138 | 19.3 | 1063 | 27.8 | 985 | 36.3 | | |
| | 2124 | 1486 | 17.4 | 1433 | 24.1 | 1359 | 34.3 | 1280 | 44.5 | 1191 | 54.6 |
| | 2862 | 2068 | 25.8 | 2016 | 34.5 | 1941 | 47.7 | 1862 | 60.9 | 1773 | 74.0 |
| 624 | 1269 | 1218 | 15.4 | 1139 | 21.8 | 1027 | 31.4 | 909 | 41.0 | | |
| | 1750 | 1787 | 21.9 | 1709 | 30.8 | 1597 | 44.0 | 1479 | 57.3 | | |
| | 2124 | 2230 | 28.4 | 2152 | 39.1 | 2039 | 55.2 | 1922 | 71.3 | | |
| | 2862 | 3104 | 44.8 | 3025 | 59.3 | 2913 | 80.9 | 2796 | 102.6 | 2662 | 124.3 |

1. Pressure ratings based on inlet air at standard temperature 68° F, ambient pressure 14.7 PSIA and specific gravity of 1.0.
2. Vacuum ratings based on inlet air at standard temperature of 68° F, discharge pressure 30″ Hg and specific gravity of 1.0.

## DESIGN & CONSTRUCTION FEATURES

1. Center-timed for rotation in either direction
2. Alloy steel timing gears
3. Cylindrical roller bearings
4. Piston ring air seals
5. Lip type oil seals
6. Splash-oil lubrication
7. Oil-free air delivery
8. High-volumetric efficiency
9. Horizontal and vertical configurations

ROOTS DRESSER

DRESSER INDUSTRIES, INC.
**ROOTS DIVISION**
900 WEST MOUNT STREET, CONNERSVILLE, INDIANA 47331
TELEPHONE: 317/825-2181

S-5283
Revised October, 1987
All specifications subject to change without notice.