MaxQ Weighted Relief Valve

Carbon Steel, 4 INCH

Made in the USA from American steel, pdblowers MaxQ valves provide the most reliable performance with simple operation and minimal maintenance. Valves are set between 2.5 PSIG through 15 PSIG using calibrated removable weights.

OPERATION: A weighted cap rides on a machined "piston". When the pressure exerted on the cap is greater than the weight of the cap, the cap rises allowing air to escape. The set pressure of the relief valve is modified by adding or removing weights. Each weight represents a change of set point of 0.5 psi.

MATERIAL: 1018 carbon steel with machined and lubricated operating surfaces. After machining, a thin-film ceramic polymer hybrid coating is applied that provides unmatched durability, hardness, and resistance to corrosion, abrasion, heat and chemicals. Steel weights are plated with RoHS compliant clear zinc for corrosion resistance.

PERFORMANCE

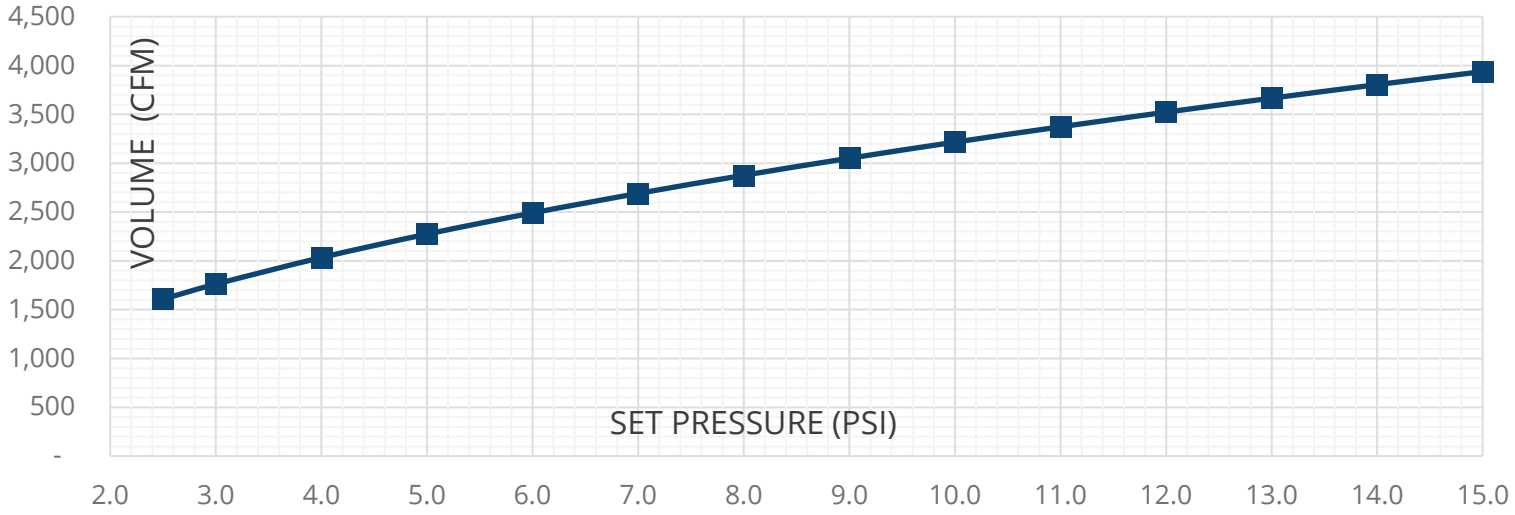

DIMENSIONS

Valve weight	38 lb
Plate weight, each	7.26 lb
Plate thickness, each	0.25”

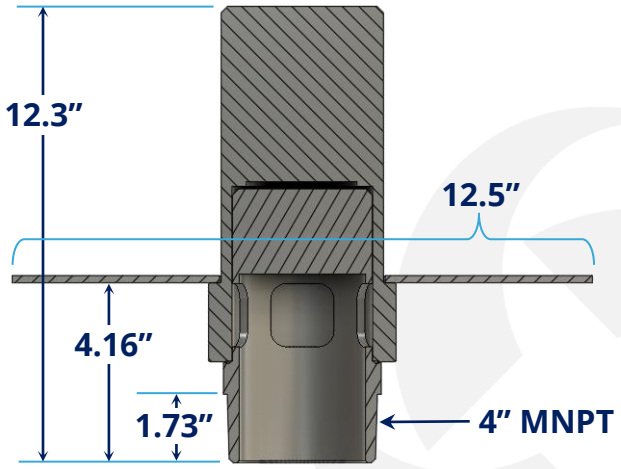

MaxQ Weighted Relief Valve

Carbon Steel, 4 INCH

INSTALLATION

Relief valves must be mounted in the vertical position to assure proper operation. The relief valve is installed on the discharge side of the blower, before any valves, preferably immediately after a silencer if one is supplied.

Wear gloves to protect hands from sharp plate edges

Wear safety glasses and do not look into the discharging valve

1. Prepare the valve by applying a thread sealant to the threaded part of the valve, such as pipe dope or Teflon tape.
2. Thread the valve into the pipe fitting, using a crescent wrench if needed.
3. Remove the weighted cap from the piston base and lubricate with synthetic blower oil if desired. Place cap onto piston.
4. Add weighted plates until the desired set point is reached. See table at right.

MAINTENANCE

Rotate the cap by hand on a monthly basis. Piston can also be lubricated with pdblowers synthetic oil for the smoothest operation.

Number of weights	Set point (PSI)	Total weight (LB)
0	2.5	38.0
1	3	45.9
2	3.5	53.7
3	4	61.6
4	4.5	69.4
5	5	77.3
6	5.5	85.1
7	6	93.0
8	6.5	100.8
9	7	108.7
10	7.5	116.5
11	8	124.4
12	8.5	132.2
13	9	140.1
14	9.5	148.0
15	10	155.8
16	10.5	163.7
17	11	171.5
18	11.5	179.4
19	12	187.2
20	12.5	195.1
21	13	202.9
22	13.5	210.8
23	14	218.6
24	14.5	226.5
25	15	234.3

pdblowers inc

Find us online at
PDBLOWERS.COM

1-800-536-9933
customerservice@pdblowers.com

HEADQUARTERS

pdblowers, Inc.
2280 Chicopee Mill Rd SW
Gainesville, GA 30501

ADDITIONAL LOCATIONS

Nevada | North Carolina | Ohio