KINNEY®

Models

A5 A10 A15 A20

Features

- No contact between operating components in the casing
- Flat power curve over entire vacuum range prevents motor overload
- Reduced stress on motor shaft and bearings
- Increased water handling capability prevents heat build-up, extends life of mechanical seals
- Compact, close-coupled design eliminates need for inter stage manifold or motor alignment
- Shrouded rotor increases pumping efficiency for high vacuum and low water consumption
- Fast delivery on standard materials and local support

Typical Pumping Speed Curves

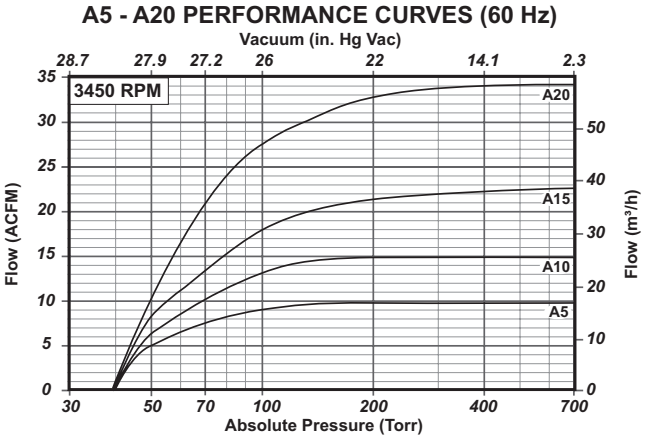

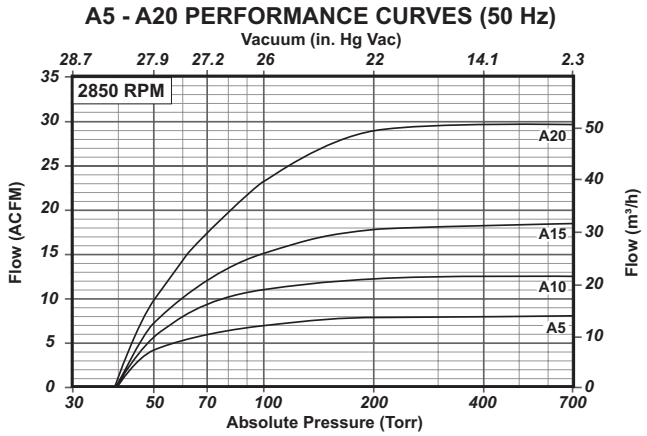

Materials of Construction

Casing, Cover, Rotor, Port Cylinder:
All Bronze
Cast Iron, Bronze Fitted
Cast Iron, Stainless Steel Fitted (A10-A20)
All Stainless Steel (A10 – A20)

Mechanical Seals:
Viton™ — Cast Iron Bronze Fitted, All Bronze, Stainless Steel
EPR — Optional
Kalrez™ — Optional

Drive Options:
Pedestal Frame
Close-coupled motor

Stocked Motors:
TEFC – 3Ø
TEFC – 1Ø

Optional Motors:
XP Class I, GpD – 3Ø — Optional
XP Class I, GpD – 1Ø — Optional

KINNEY • 4840 W. KEARNEY ST., SPRINGFIELD, MO 65803 USA
P: 417-865-8715 OR 1-800-825-6937 • F: 417-865-2950
WWW.KINNEYVACUUM.COM

K-CS-AF-AS-A5-20 1st Ed. 3/21

Dimensions

Values shown are approximate and should not be used for construction.
Certified drawings are available through your local Kinney Sales Professional.

Close-coupled Design

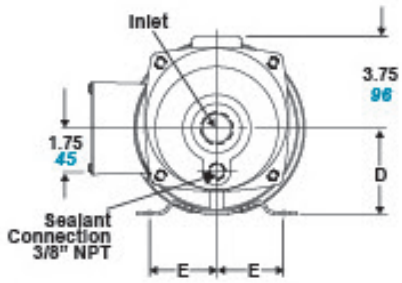

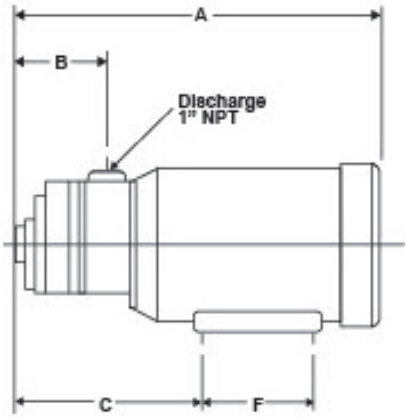

MODEL	FRAME	INLET NPT	inches/*mm*						MOTOR HP	Weight (lbs./*kg*)
			A	B	C	D	E	F		
A5	**56CZ**	3/4”	14.0 / ***356***	2.9 / ***74***	6.7 / ***170***	3.5 / ***89***	2.44 / ***62***	3.0 / ***76***	1	50 / ***23***
A10	**145TCZ**	1”	16.6 / ***422***	3.6 / ***92***	8.0 / ***203***	3.5 / ***89***	2.75 / ***70***	5.0 / ***127***	1 1/2	62 / ***28***
A15	**145TCZ**	1”	17.0 / ***432***	3.8 / ***97***	8.3 / ***211***	3.5 / ***89***	2.75 / ***70***	5.0 / ***127***	2	69 / ***31***
A20	**182CZ**	1”	18.5 / ***470***	4.6 / ***117***	9.6 / ***244***	4.5 / ***114***	3.75 / ***95***	5.5 / ***140***	3	85 / ***39***

Pedestal Mount Design

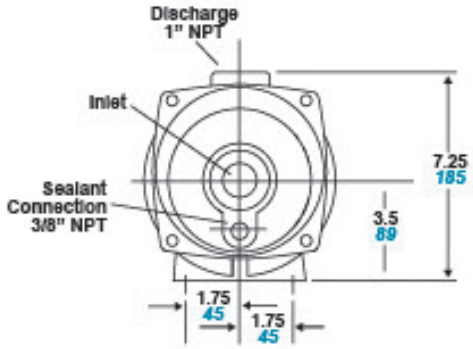

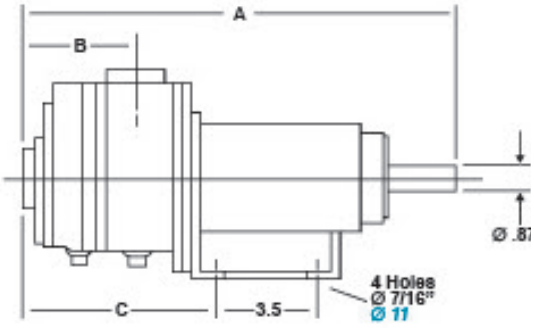

MODEL	INLET NPT	inches/*mm*			Weight (lbs./*kg*)
		A	B	C	
A10	1”	14.52 / ***369***	3.52 / ***89***	6.20 / ***157***	42 / ***19***
A15	1”	14.83 / ***377***	3.83 / ***97***	6.51 / ***165***	44 / ***20***
A20	1”	15.60 / ***396***	4.60 / ***117***	7.28 / ***185***	48 / ***22***

CONTACT US

For more information, contact your
Regional Sales Manager or call us at:

1-800-825-6937

Your Local Sales Professional:

pdblowers inc
1-800-536-9933 | customerservice@pdblowers.com
Find us online at PDBLOWERS.COM

KINNEY • 4840 W. KEARNEY ST., SPRINGFIELD, MO 65803 USA
P: 417-865-8715 OR 1-800-825-6937 • F: 417-865-2950
WWW.KINNEYVACUUM.COM

K-CS-AF-AS-A5-20 1st Ed. 3/21